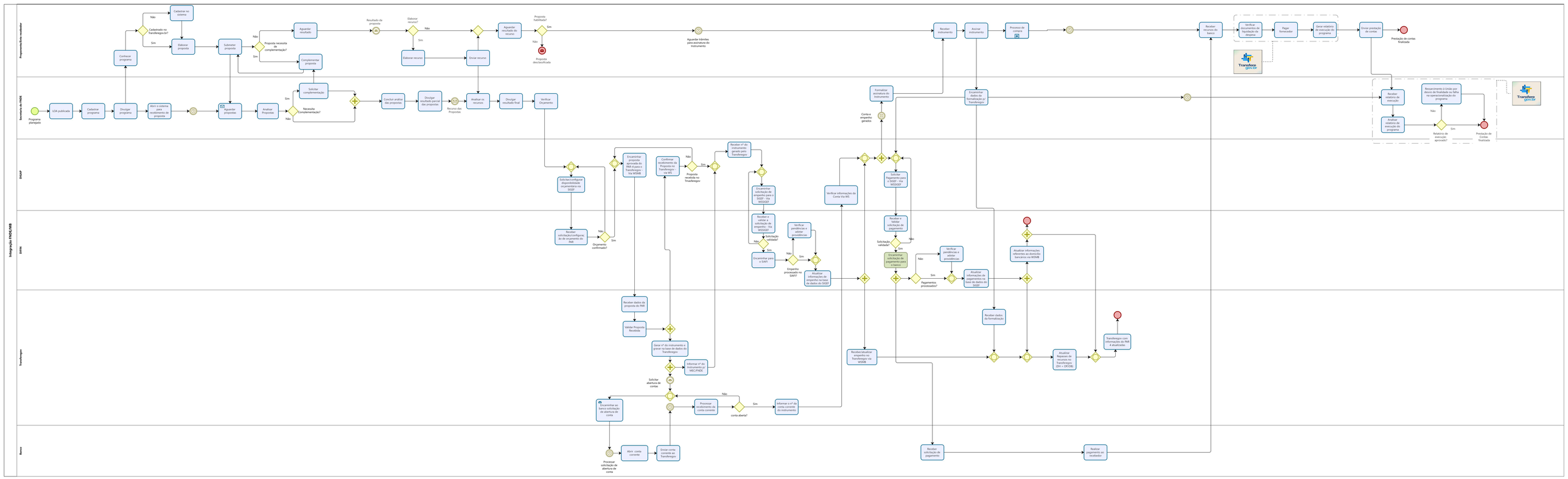


Powered by Bizagi Modeler